Technical Features

- Temperature: 0-85°C
- Connection Sizes: NPT 1/2
- Maximum Working Pressure: 350PSI
- Electrical Ratings: DC24V, 16W IP68
- Medium: Water and Air

Structure Character
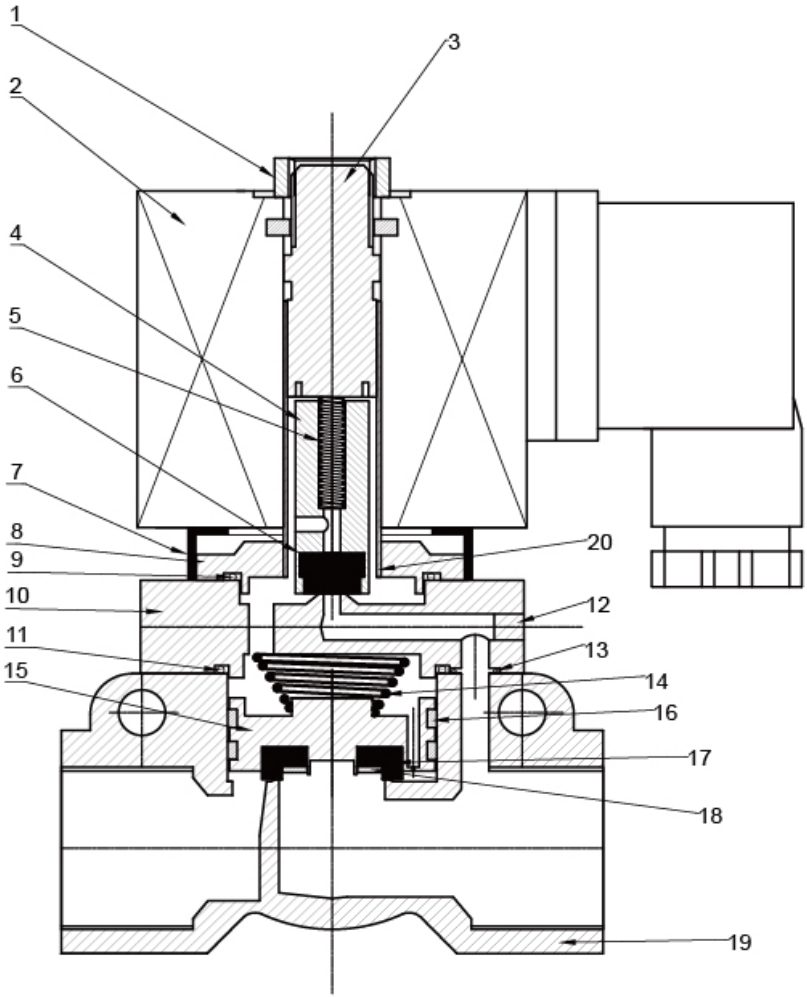
NO.	Name	Material
1	Nut	A3
2	Coil	
3	Static Iron Core	1J117
4	Dynamic Iron Core	1J117
5	Spring	304H
6	Chock Plug	EPDM
7	Plastic Housing	
8	Flange	ZCuAl8Mn13Fe3
9	O-ring(Φ25xΦ1.5)	EPDM
10	Valve Body I	ZCuAl8Mn13Fe3
11	O-ring(Φ28xΦ1.5)	EPDM
12	Casting Insert	ZCuAl8Mn13Fe3
13	O-ring(Φ6xΦ1.2)	EPDM
14	Pagoda Spring	304H
15	Piston	ZCuAl8Mn13Fe3
16	Wearing Ring	
17	Hard Seang	PTFE
18	Flat Washer	SOS304
19	Valve Body Ii	ZCuAl8Mn13Fe3
20	Casing Pipe	S304